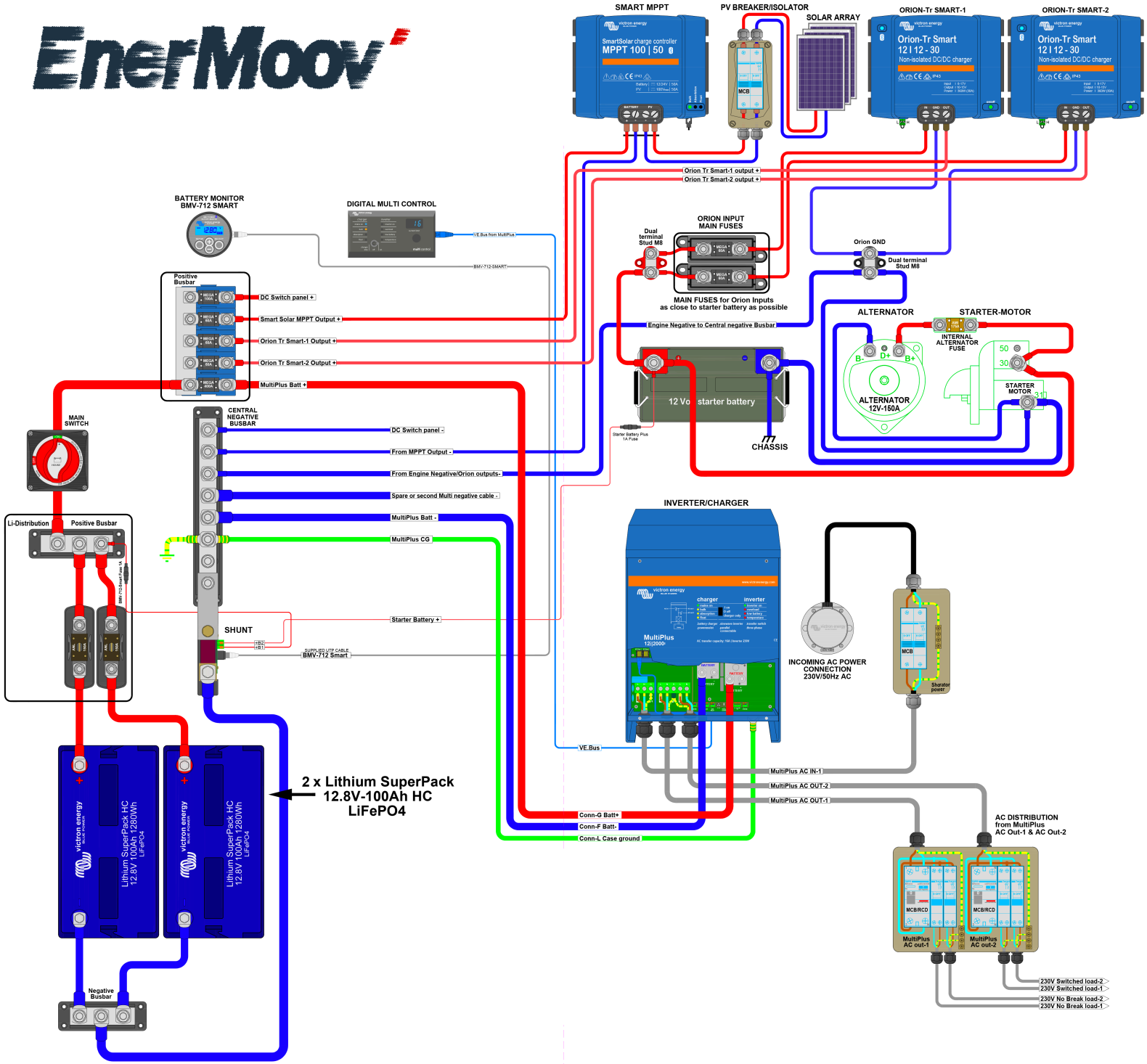
EnerMoov
SMART MPPT
SmartSolar charge controller
MPPT 100 | 50
PV BREAKER/ISOLATOR
MCB
SOLAR ARRAY
ORION-Tr SMART-1
Orion-Tr Smart
12 | 12 - 30
Non-isolated DC/DC charger
ORION-Tr SMART-2
Orion-Tr Smart
12 | 12 - 30
Non-isolated DC/DC charger
Orion Tr Smart-1 output +
Orion Tr Smart-2 output +
BATTERY MONITOR
BMV-712 SMART
DIGITAL MULTI CONTROL
VE.Bus from MultiPlus
BMV-712-SMART
ORION INPUT
MAIN FUSES
Dual terminal Stud M8
MAIN FUSES for Orion Inputs as close to starter battery as possible
Orion GND
Dual terminal Stud M8
Positive Busbar
DC Switch panel +
Smart Solar MPPT Output +
Orion Tr Smart-1 Output +
Orion Tr Smart-2 Output +
MultiPlus Batt +
Engine Negative to Central negative Busbar
ALTERNATOR
STARTER-MOTOR
INTERNAL ALTERNATOR FUSE
B-
D+
B+
ALTERNATOR
12V-150A
50
30
STARTER MOTOR
31
12 Volt starter battery
Starter Battery Plus
1A Fuse
CHASSIS
MAIN SWITCH
CENTRAL NEGATIVE BUSBAR
DC Switch panel -
From MPPT Output -
From Engine Negative/Orion outputs-
Spare or second Multi negative cable -
MultiPlus Batt -
MultiPlus CG
Li-Distribution
Positive Busbar
BMV-712-Smart Fuse 1A
SHUNT
Starter Battery +
SUPPLIED UTP CABLE
BMV-712 Smart
INVERTER/CHARGER
MultiPlus
12|2000
charger
inverter
INCOMING AC POWER CONNECTION
230V/50Hz AC
Shoreline power
VE.Bus
MultiPlus AC IN-1
MultiPlus AC OUT-2
MultiPlus AC OUT-1
Conn-G Batt+
Conn-F Batt-
Conn-L Case ground
2 x Lithium SuperPack
12.8V-100Ah HC
LiFePO4
Lithium SuperPack HC
12.8V 100Ah 1280Wh
LiFePO4
Negative Busbar
AC DISTRIBUTION from MultiPlus AC Out-1 & AC Out-2
MCB/RCD
MultiPlus AC out-1
MultiPlus AC out-2
230V Switched load-2
230V Switched load-1
230V No Break load-2
230V No Break load-1